CAM-24LN

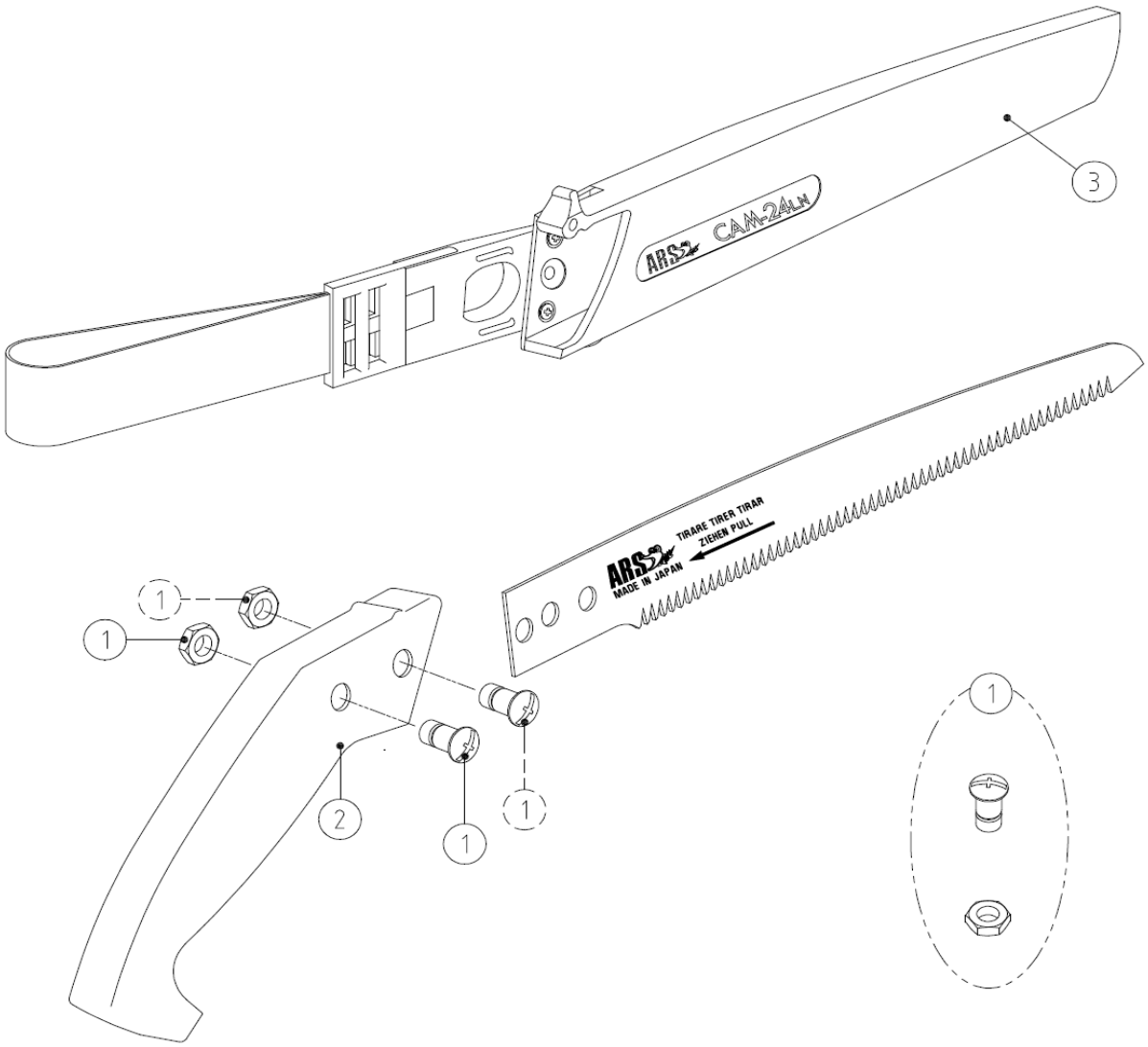

PARTS NO.	SPECIFICATION	PARTS NO.	SPECIFICATION
① SP-5	BOLT & NUT FOR CAM-18/18L/18LN/24L/		
	24KL/24LN (1PC EACH)		
② SP-272	GRIP FOR CAM-24LN (GRIP COLOR : RED)		
③ SP-293	SHEATH FOR CAM-24LN		