PM-21 / PM-21L / PM-24 / PM-24L

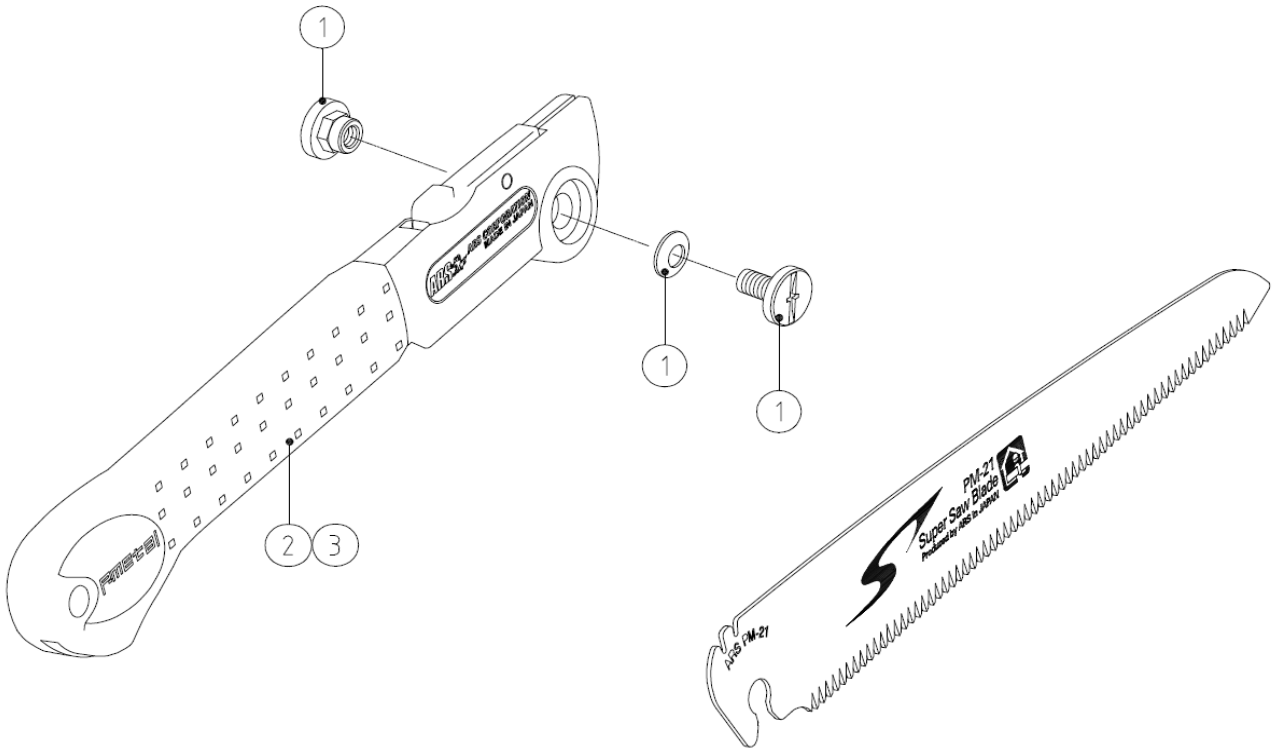

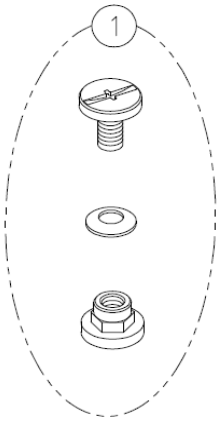

PARTS NO.	SPECIFICATION	PARTS NO.	SPECIFICATION
① SP-324	BOLT, NUT & WASHER FOR PM-21/21L/24/24L		
② SP-325	GRIP FOR PM-21/21L		
③ SP-326	GRIP FOR PM-24/24L		